DATASHEET

2FG7

v1.7

1. Datasheet

1.1. 2FG7

General Properties			Minimum	Typical	Maximum	Unit
Payload force fit 			- -	- -	7 15.5	[kg] [lb]
Payload form fit 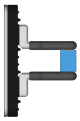			- -	- -	11 24.3	[kg] [lb]
Total stroke			-	38 1.49	-	[mm] [inch]
Grip width range *	External	Fingers inwards 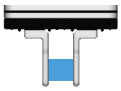	1 0.039	-	39 1.53	[mm] [inch]
		Fingers outwards 	35 1.37	-	73 2.87	[mm] [inch]
	Internal	Fingers inwards 	11 0.43	-	49 1.92	[mm] [inch]
		Fingers outwards 	45 1.77	-	83 3.26	[mm] [inch]
Gripping repeatability			- -	+/- 0.1 +/- 0.004	- -	[mm] [inch]
Gripping force **			20	-	140	[N]
Gripping force tolerance			-	-	+/-5	[N]
Gripping speed ***			16	-	450	[mm/s]
Gripping time (including brake activation) ****			-	200	-	[ms]
Hold workpiece if power loss?			Yes			
Storage temperature			0 32	- -	60 140	[°C] [°F]
Motor			Integrated, electric BLDC			
IP Classification			IP67			
Clean room *****			ISO Class 5			
ESD Safe *****			10^5	-	10^9	[Ohm]

General Properties	Minimum	Typical	Maximum	Unit
Gear grease: NSF H1 approved; meets FDA regulation 21 CFR 178.3570 for incidental food contact applications				
Dimensions [L x W x D]	144 x 90 x 71 5.67 x 3.54 x 2.79			[mm] [inch]
Weight	1.1 2.4			[kg] [lb]

* Silicone fingertips add 1 mm in each direction.

** The required current is 2000 mA, less current will result in less gripping force. See the **Force vs Current Graph**.

*** Relatively from the gripping object (both arms).

**** At 4 mm stroke and 80 N. The typical value is 300 ms at 38 mm and 80 N.

***** When the ESD-marked bellow is mounted. For more information on how to distinguish the different bellows, go to the **Maintenance** section.

Operating Conditions	Minimum	Typical	Maximum	Unit
Power supply	20	24	25	[V]
Current consumption	-	-	2000 *	[mA]
Operation temperature	5 41	- -	50 122	[°C] [°F]
Relative humidity (non-condensing)	0	-	95	[%]
Calculated operation life	30 000	-	-	[Hours]

* Automatically adapts to the current requirements. For more information, see the **Current Requirements** section.

Force vs Current Graph

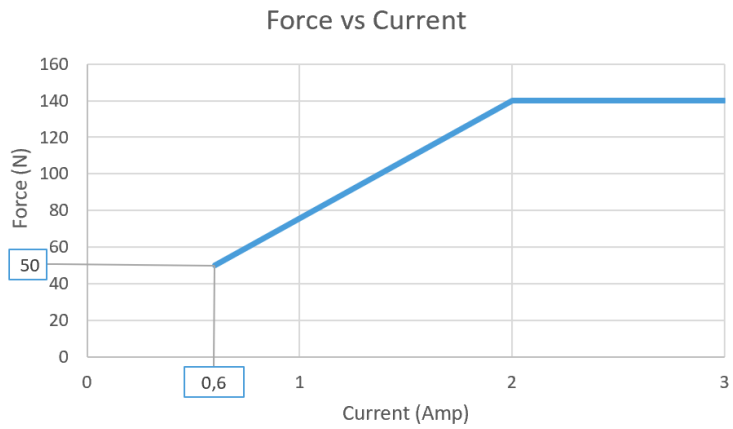

Force Sensor

The gripper has a force sensor in the finger on the connector side as shown in the figure below.

Consider the presence of the force sensor when the workpiece is aligned by using the fingers of the gripper or when the workpiece is picked sideways since the gravity can affect the force measurement.
In the latter case, orient the gripper so the finger with the sensor is on top. Make sure that the bottom finger touches the workpiece slightly before the top finger touches it, as shown in the figure below.

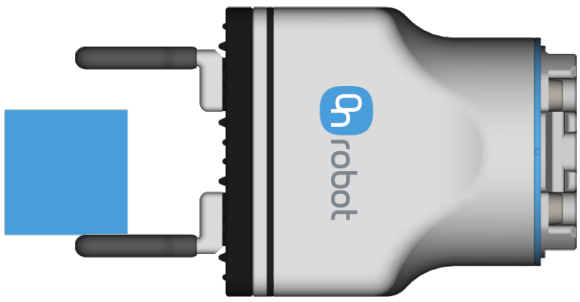

Fingers

The supplied fingers can be mounted in two different positions to achieve different gripping ranges.

	Inwards	Outwards
	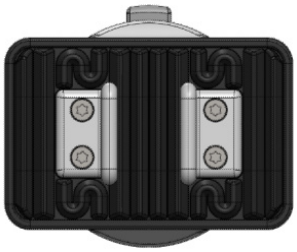	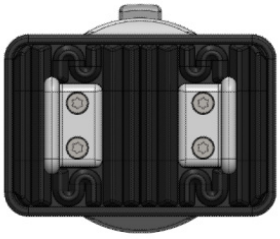
External grip range [mm]	1-39	35-73
Internal grip range [mm]	11-49	45-83

The delivered finger length is 8.5 mm (L in the drawing below). If custom fingers are required, they can be made to fit the gripper according to the dimensions (mm)[inch] shown below. Use M4x8mm screws and 1 Nm torque to attach the fingers.

NOTE:

If customized fingers are made, these must not touch the bellow.

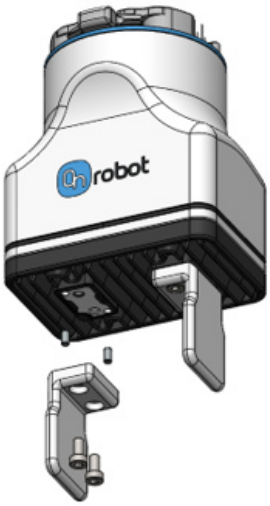

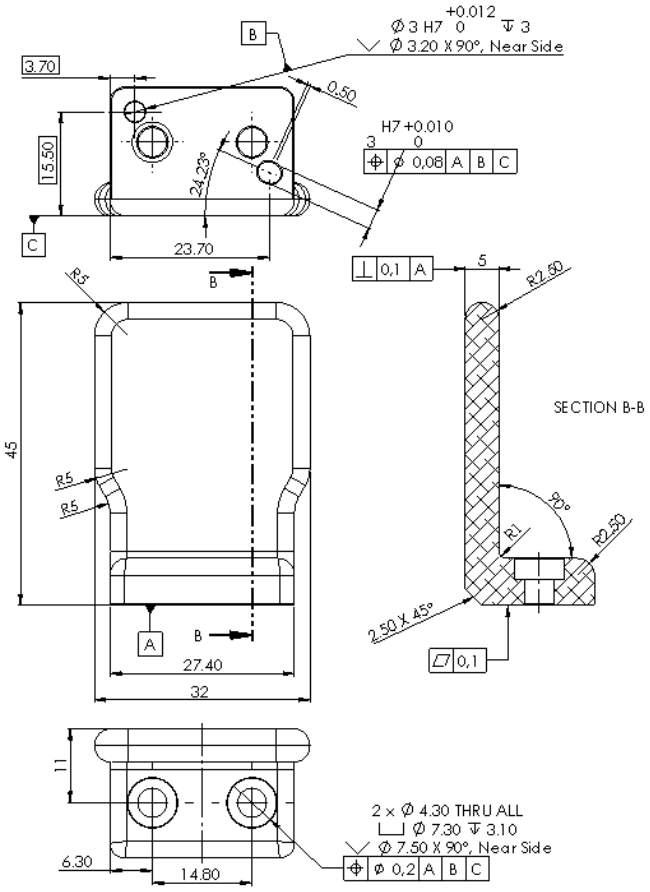

Maximum Allowed Torque

The maximum allowed torque applied to the gripper finger platforms is 5 Nm. The picture below shows the coordinate system from where the maximum allowed torque is calculated. 5 Nm corresponds to full gripping force at 36 mm from finger platform.

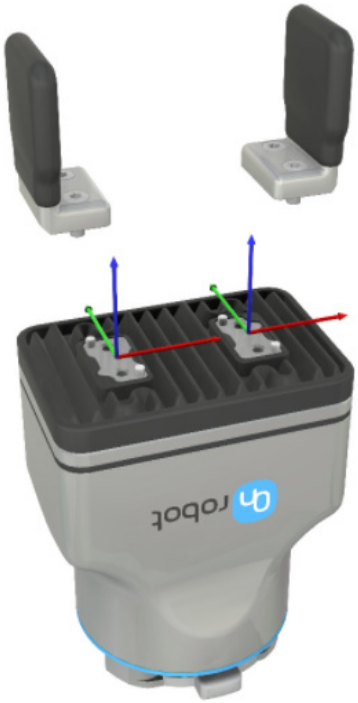

Force vs Finger Length

The graph below shows how the maximum allowable force decreases as the finger length increases in case of customized fingertips. The graph is valid for all types of individual lengths shown in the image of the gripper below.

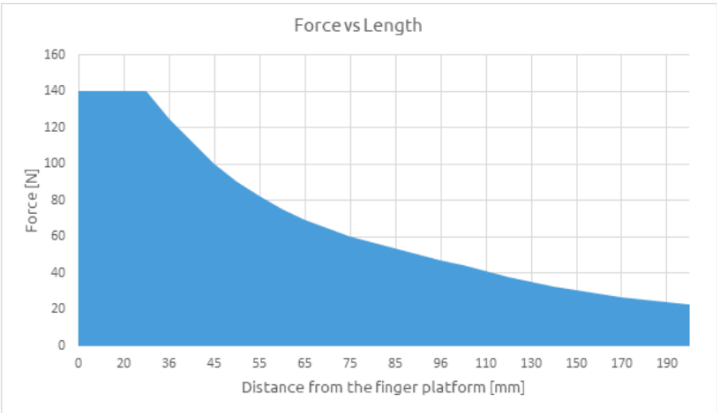

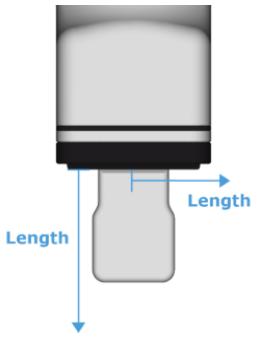

Types of Grips

In this document, we use the internal and external grip terms, which indicates how the tool grips the workpiece.

External Grip	Internal Grip
	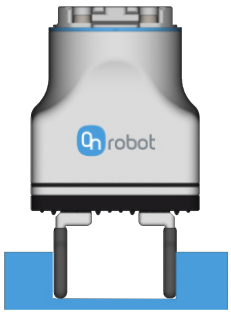

Bellow Compatibility of Different Lubricants, Oils and Additives

See the table below for a recommendation overview of what lubricants the two bellows have good resistance properties to. For example in CNC machines, mineral oils are often used as cooling liquids, which the Standard Bellow is appropriate for.

Bellow, Standard (NBR)	Bellow, ESD and Cleanroom (Silicone)
Greases	
Silicone Oils	
Vegetable Oils	
Alcohols	Brake Fluids
Diester Lubricants	Ketones
Ethylene Glycol Fluids	Oxygen
Petroleum Oils	Animal Oils
Hydraulic Fluids	Sunlight
Diluted Alkalines	Compression Set
Aliphatic Hydrocarbons	Ozone
Mineral Oils	
Common Fuels	
Solvents	
Acids	

NOTE:

The list of fluids and additives shown in the table above is non-exhaustive, as all combinations cannot be tested.

Make sure to mix cooling liquid and water according to supplier specification, and change regularly.

Current Requirements

Robot Type	Maximum Current
ABB	2000 mA
FANUC CRX	2000 mA
Kassow	700 mA
UR	600 mA

Additional Equipment

The 2FG7 features two mounting holes designed to accommodate peripheral equipment such as small sensors or other lightweight devices. These holes can handle a maximum torque of 1 Nm.

NOTE:

Threads will be covered with screws when the gripper is delivered.

1.2. 2FG7 box content

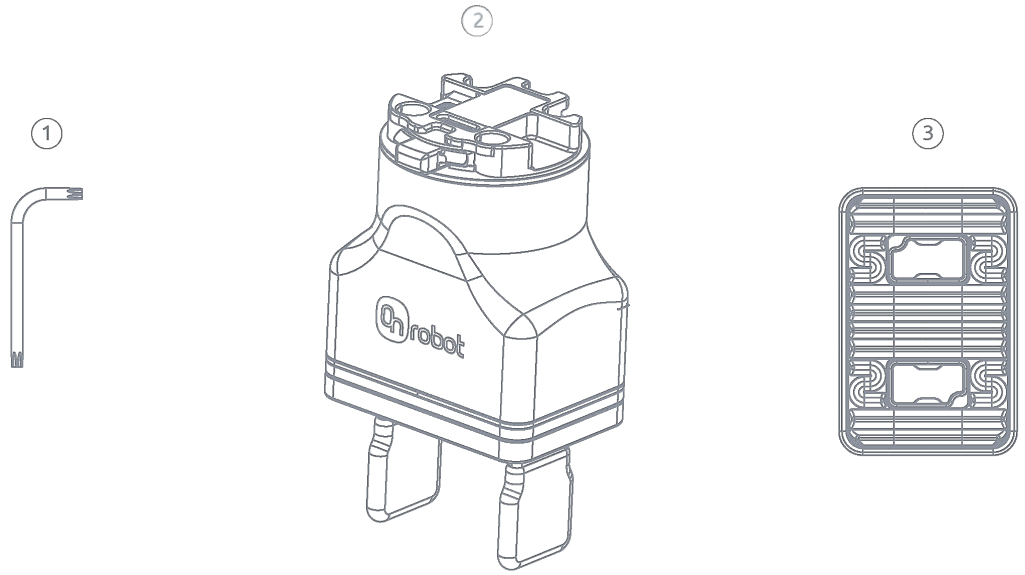

1 Torx T20 Key

2 2FG7

3 1 x 2FG7 Bellow, Standard
2 x 2FG7 Bellow, ESD and Cleanroom

1.3. 2FG7

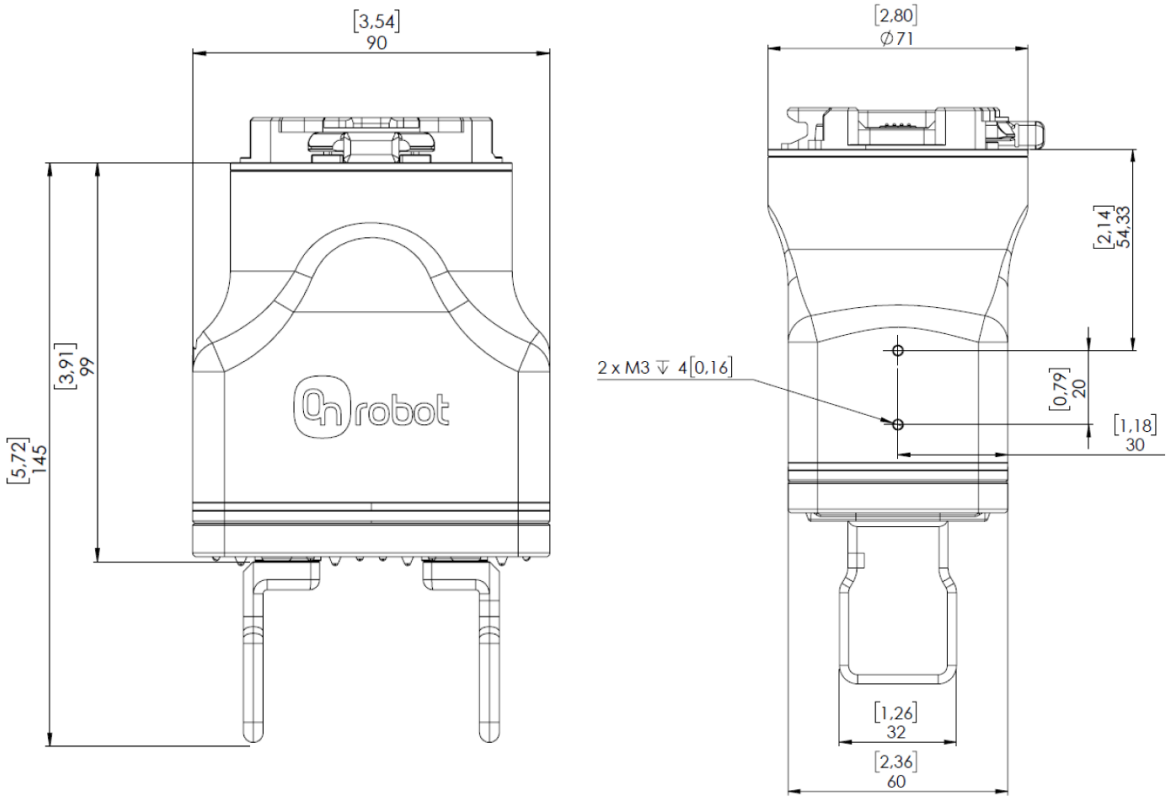

All dimensions are in mm and [inches].